Microstep Driver with USB Interface
8SMC1-USBhF

Description

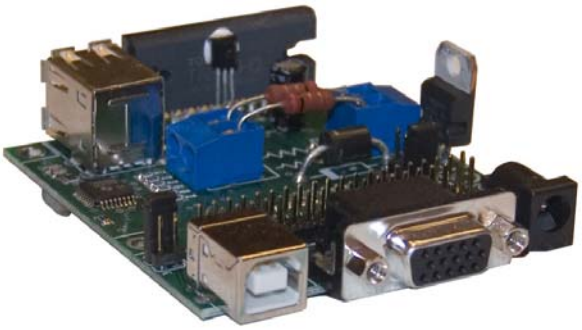

8SMC1-USBhF is compact, all-in-one, low cost microstep stepping motor driver with high functionality and modern USB interface. It is designed to drive one bipolar stepping motor by local and/or remote means.

The 8SMC1-USBhF incorporates PWM chopper type sinusoidal micro step bipolar stepping motor driver, fully integrated mixed-signal System-on-a-Chip MCU, USB controller and 3-port USB hub on one board. Controller features include built in over temperature, over voltage, short circuit and reverse supply protections.

The built-in powerful MCU on the 8SMC1-USBhF allows the user, via USB interface, to control all parameters such as position, acceleration/deceleration ramps, velocity, direction, resolution, drive current, etc., to form simple or complex motions. All parameters can be saved on PC or in MCU flash memory. The 8SMC1-USBhF has a variety of built-in functions, including local control, programmable limit switch inputs, homing algorithm, quadrature encoder or revolution sensor support, additional input/output for synchronization.

Features

Electrical

- Average current per phase of stepping motor up to 1.5A
- Stepper motor power supply voltage up to 40V
- Short circuit, overcurrent, overvoltage and temperature protections
- Screw mounted and easy to change current sense resistors
- Multi-purpose 40 pin connector for embedded applications
- A number of additional connectors (15 pin D-Sub, USB type A, 2x USB type B, DC input)
- Synchronization Input/Output
- Different ways of power supply, including single power, dual power and USB power

Motion

- Resolution: full step, 1/2, 1/4, 1/8
- Speed: 2-5000 steps/s
- Programmable speed and trip points
- Programmable accel and decel ramps
- Soft start/stop mode

Control

- Two knobs and three LEDs for manual control and local indication
- Quadrature encoder or Revolution sensor
- Two programmable limit switches and emergency stop switch
- Remote control via USB 1.1 interface

Dimensions

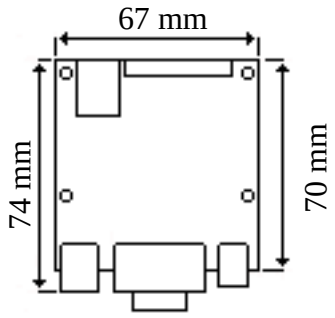

Programming

- Graphical user interface SMCVieW for Windows 2000/XP/Vista
- Drivers and dynamic link library for Windows 2000/XP/Vista/Mobile host programming
- Set of virtual instruments for National Instruments LabVIEW